STANDARD SANITARY SEWER DRAWINGS & DETAILS FOR

CITY OF JEFFERSONVILLE, INDIANA

LOCATION MAP

NOT TO SCALE

SHEET INDEX	
SHEET NO.	TITLE
1	COVER SHEET
2	PIPE BEDDING & CROSSING DETAILS
3	SANITARY SEWER STRUCTURE DETAILS
4	SANITARY LATERAL CONNECTION & MISC. DETAILS
5	FORCE MAIN DETAILS
6	ELECTRICAL CONTROL CABINET AND ENCLOSURE DETAILS
7	PUMP STATION DETAILS

DRAWN: D. HAYDEN

PROFESSIONAL ENGINEER'S SEAL

SANITARY SEWER PLANS

CITY OF JEFFERSONVILLE

COVER SHEET

JEFFERSONVILLE, INDIANA

Revisions

Vertical Scale: NOTED

Horizontal Scale: NOTED

Date: 2/5/2015

Sheet 1

1 of 7

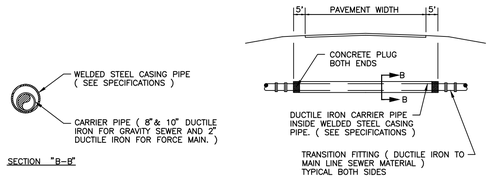

BORE & JACK DETAIL

NO SCALE

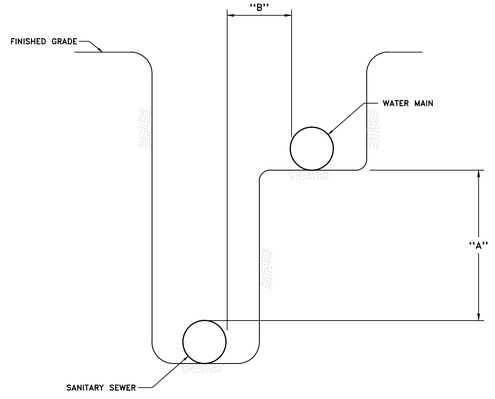

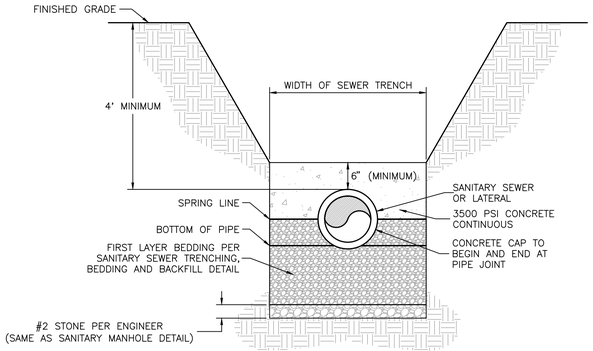

NOTE:
CONCRETE SHALL BE HIGH-EARLY YIELD AND SHALL NOT BE BACKFILLED UNTIL ENGINEER DEEMS THE CONCRETE ADEQUATELY CURED.

NOTE:
ONLY TO BE USED WHEN COVER OVER TOP OF PIPE IS 4-5 FEET, PER ENGINEER'S DIRECTION OR WHERE NOTED ON THE CONSTRUCTION PLANS.

CONCRETE CAP DETAIL

NO SCALE

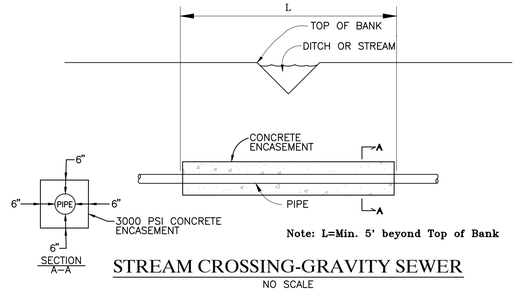

Note: L=Min. 5' beyond Top of Bank

STREAM CROSSING-GRAVITY SEWER

NO SCALE

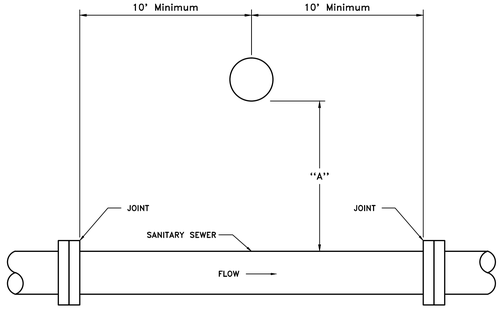

IF "A" IS	IF "B" IS	THEN SANITARY SEWER PIPE SEGMENT SHALL BE
18" OR MORE	10' OR MORE	NO SPECIAL PIPE MATERIAL OR GRADE REQUIREMENTS
LESS THAN 18"	LESS THAN 10'	PVC (EITHER ASTM D 2241(SDR 21 MINIMUM) OR ANSI/AWWA C900 (OR 18" MINIMUM OR ANSI/AWWA C905 (OR 21 MINIMUM) OR DUCTILE IRON CLASS 51 MINIMUM

NOTE: SEPARATION DISTANCES FROM WATER SUPPLIES AND PIPE CLASSIFICATIONS SHALL CONFORM TO INDIANA STATE BOARD OF HEALTH'S "ON SITE WATER SUPPLY AND WASTEWATER DISPOSAL FOR PUBLIC AND COMMERCIAL ESTABLISHMENT'S – BULLETIN S.E. 13"

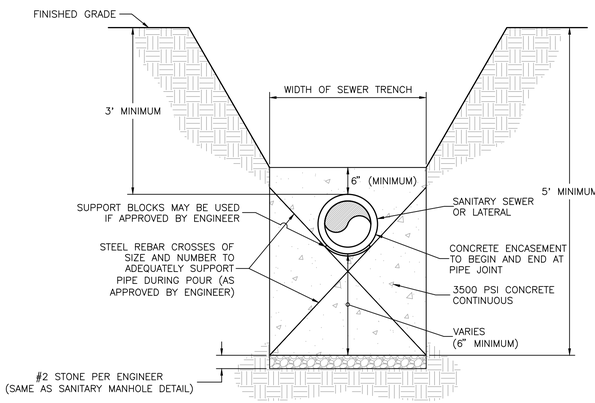

CONCRETE ENCASEMENT DETAIL

NO SCALE

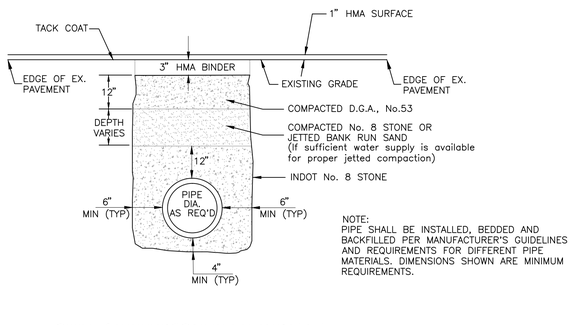

NOTE:
PIPE SHALL BE INSTALLED, BEDDED AND BACKFILLED PER MANUFACTURER'S GUIDELINES AND REQUIREMENTS FOR DIFFERENT PIPE MATERIALS. DIMENSIONS SHOWN ARE MINIMUM REQUIREMENTS.

CITY of JEFFERSONVILLE, INDIANA
PIPE BEDDING DETAIL IN PAVED AREAS AND OVERLAY DETAIL

NO SCALE

(Type 1 Backfill)

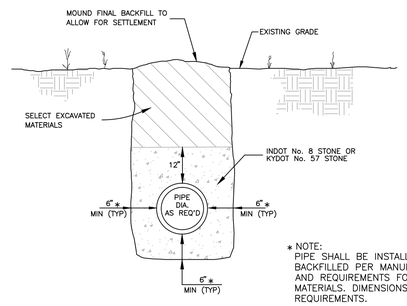

* NOTE:
PIPE SHALL BE INSTALLED, BEDDED AND BACKFILLED PER MANUFACTURER'S GUIDELINES AND REQUIREMENTS FOR DIFFERENT PIPE MATERIALS. DIMENSIONS SHOWN ARE MINIMUM REQUIREMENTS.

CITY of JEFFERSONVILLE, INDIANA
PIPE BEDDING DETAIL IN EARTH AREAS

NO SCALE

(Type 2 Backfill)

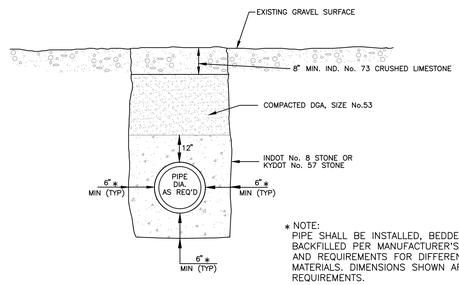

* NOTE:
PIPE SHALL BE INSTALLED, BEDDED AND BACKFILLED PER MANUFACTURER'S GUIDELINES AND REQUIREMENTS FOR DIFFERENT PIPE MATERIALS. DIMENSIONS SHOWN ARE MINIMUM REQUIREMENTS.

CITY of JEFFERSONVILLE, INDIANA
PIPE BEDDING DETAIL IN GRAVELED AREAS

NO SCALE

(Type 3 Backfill)

DRAWN: D. HAYDEN

PROFESSIONAL ENGINEER'S SEAL

SANITARY SEWER PLANS
CITY OF JEFFERSONVILLE
PIPE BEDDING & CROSSING DETAILS

JEFFERSONVILLE, IN

Revisions

Vertical Scale: NOTED

Horizontal Scale: NOTED

Date: 2/5/2015

Sheet
2
2 of 7

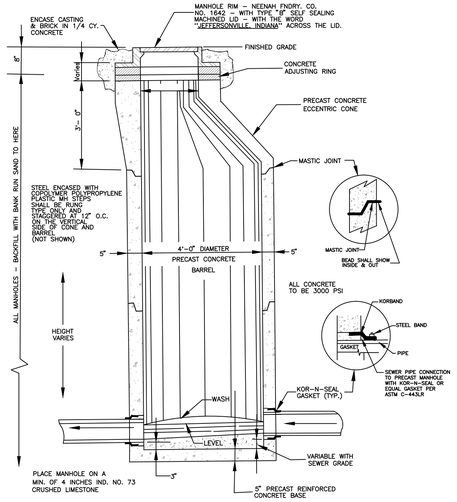

CITY of JEFFERSONVILLE, INDIANA

TYPE "B" SANITARY SEWER MANHOLE

NO SCALE

NOTE:
THE CONTRACTOR SHALL BE RESPONSIBLE FOR ADJUSTING ALL RIM ELEVATIONS TO THE FINISHED GROUND/PAVED SURFACE. AS A RESULT, ALL MANHOLE CASTING/RIMS SITUATED IN THE PAVEMENT SHALL BE ADJUSTED TO MATCH THE FINISHED OVERLAY SURFACE.

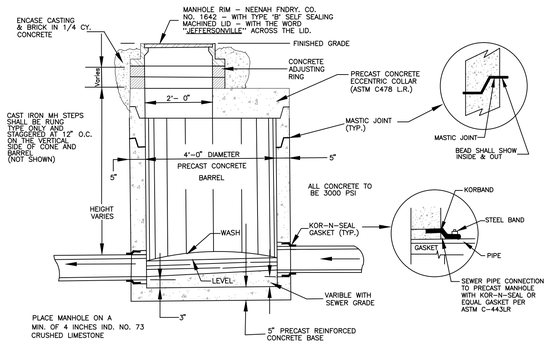

FOR MANHOLES LESS THAN 7.5' DEEP

CITY of JEFFERSONVILLE, INDIANA

TYPE "C" SANITARY SEWER MANHOLE

NO SCALE

NOTE:
THE CONTRACTOR SHALL BE RESPONSIBLE FOR ADJUSTING ALL RIM ELEVATIONS TO THE FINISHED GROUND/PAVED SURFACE. AS A RESULT, ALL MANHOLE CASTING/RIMS SITUATED IN THE PAVEMENT SHALL BE ADJUSTED TO MATCH THE FINISHED OVERLAY SURFACE.

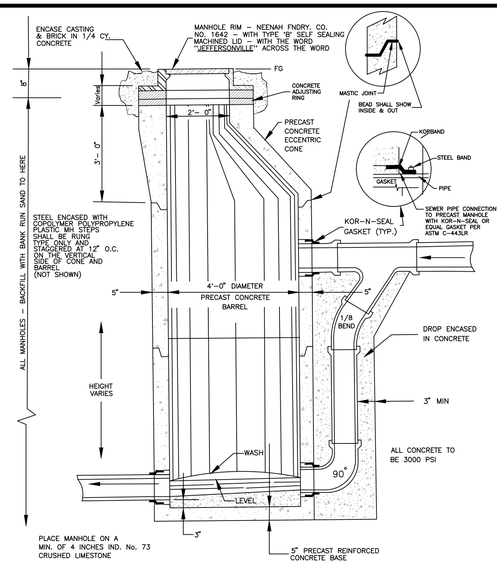

CITY of JEFFERSONVILLE, INDIANA

TYPE "E" SANITARY SEWER DROP MANHOLE

NO SCALE

NOTE:
THE CONTRACTOR SHALL BE RESPONSIBLE FOR ADJUSTING ALL RIM ELEVATIONS TO THE FINISHED GROUND/PAVED SURFACE. AS A RESULT, ALL MANHOLE CASTING/RIMS SITUATED IN THE PAVEMENT SHALL BE ADJUSTED TO MATCH THE FINISHED OVERLAY SURFACE.

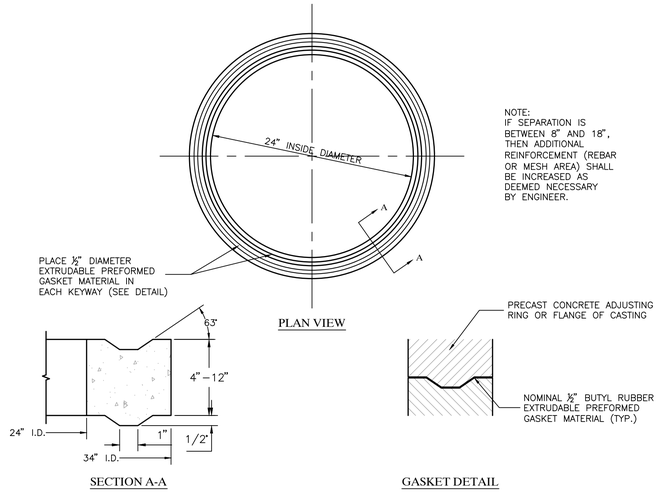

ADJUSTING RING DETAIL

NO SCALE

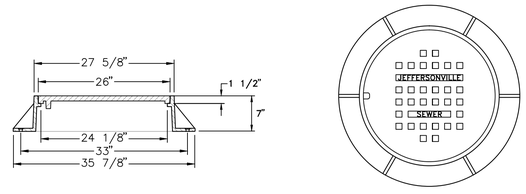

CITY of JEFFERSONVILLE, INDIANA
R-1642

MANHOLE FRAME, SOLID LID DETAIL

NO SCALE

NOTE:
ALL MANHOLE FRAMES, SOLID LID MUST BE R-1642 WITH THE NAME OF JEFFERSONVILLE ON IT. FOR STORM SEWER, YOU NEED TO USE R-1642-1 AND FOR CURB INLET FRAME AND GRATE, YOU MUST USE R-3010.

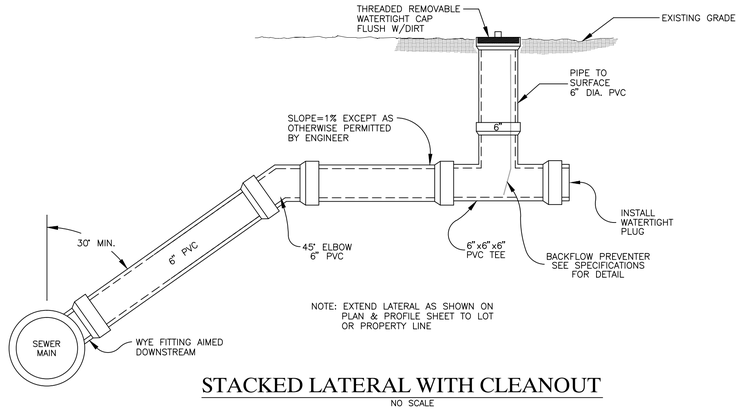

STACKED LATERAL WITH CLEANOUT

NO SCALE

DRAWN: D. HAYDEN

PROFESSIONAL ENGINEER'S SEAL

SANITARY SEWER PLANS

CITY OF JEFFERSONVILLE

SANITARY SEWER STRUCTURE DETAILS

JEFFERSONVILLE, IN

Revisions

Vertical Scale: NOTED

Horizontal Scale: NOTED

Date: 2/5/2015

Sheet 3

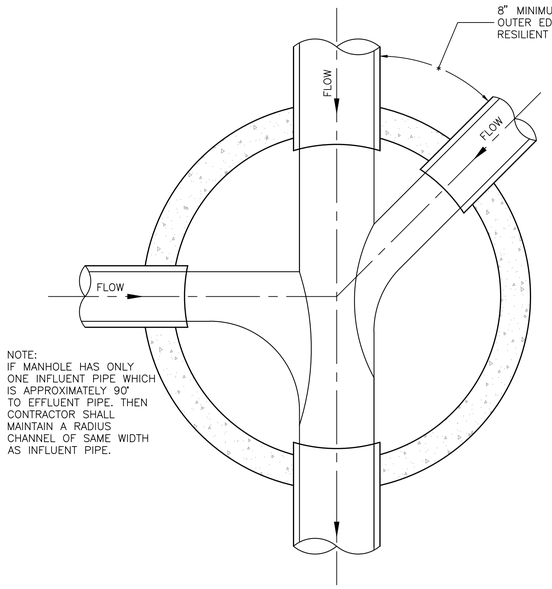

NOTE:
IF MANHOLE HAS ONLY ONE INFLUENT PIPE WHICH IS APPROXIMATELY 90° TO EFFLUENT PIPE, THEN CONTRACTOR SHALL MAINTAIN A RADIUS CHANNEL OF SAME WIDTH AS INFLUENT PIPE.

NOTE:
IF SEPARATION IS BETWEEN 8" AND 18", THEN ADDITIONAL REINFORCEMENT (REBAR OR MESH AREA) SHALL BE INCREASED AS DEEMED NECESSARY BY ENGINEER.

FLOW CHANNEL DETAIL

NO SCALE

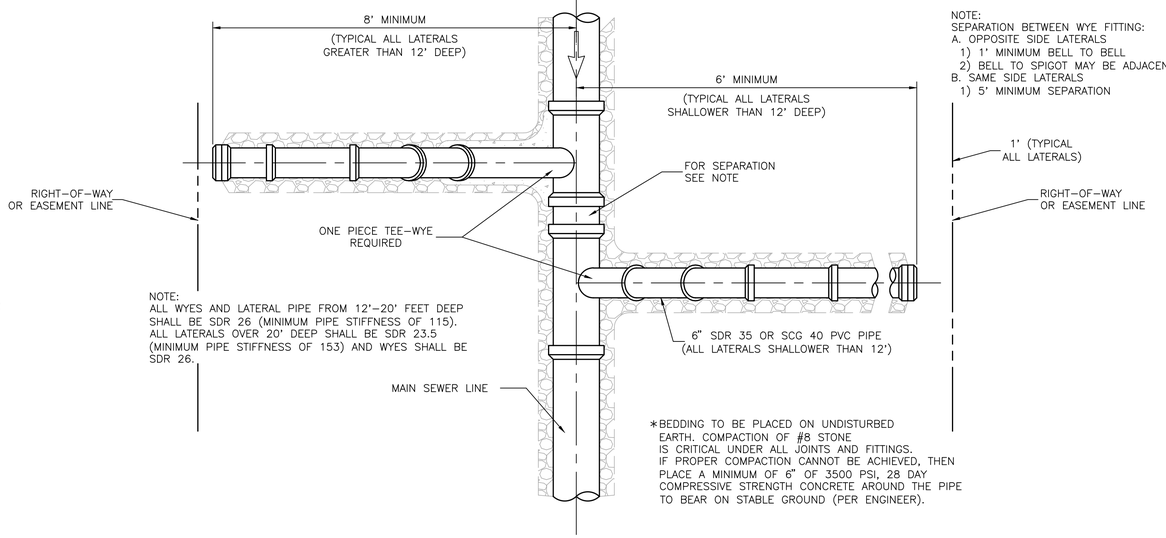

NOTE:
ALL WYES AND LATERAL PIPE FROM 12'-20' FEET DEEP SHALL BE SDR 26 (MINIMUM PIPE STIFFNESS OF 115). ALL LATERALS OVER 20' DEEP SHALL BE SDR 23.5 (MINIMUM PIPE STIFFNESS OF 153) AND WYES SHALL BE SDR 26.

NOTE:
SEPARATION BETWEEN WYE FITTING:
A. OPPOSITE SIDE LATERALS
1) 1' MINIMUM BELL TO BELL
2) BELL TO SPIGOT MAY BE ADJACENT
B. SAME SIDE LATERALS
1) 5' MINIMUM SEPARATION

*BEDDING TO BE PLACED ON UNDISTURBED EARTH. COMPACTION OF #8 STONE IS CRITICAL UNDER ALL JOINTS AND FITTINGS. IF PROPER COMPACTION CANNOT BE ACHIEVED, THEN PLACE A MINIMUM OF 6" OF 3500 PSI, 28 DAY COMPRESSIVE STRENGTH CONCRETE AROUND THE PIPE TO BEAR ON STABLE GROUND (PER ENGINEER).

PLAN VIEW

NOTE:
TO BE USED WHEN CLEAR DISTANCE (FROM EXTERIOR PIPE DIAMETER TO EXTERIOR PIPE DIAMETER) BETWEEN SANITARY SEWER PIPING (MAINS, LATERALS, FORCE MAINS, ETC.) AND ALL OTHER PIPES IS 18" OR LESS, PER ENGINEER'S DIRECTION, OR WHERE NOTED ON THE PROVIDED TO MAINTAIN STRUCTURAL INTEGRITY OF THE CONCRETE. CONCRETE MUST NOT COME INTO CONTACT WITH FORCE MAIN. AT LEAST 3" OF SAND MUST BE PLACED AS A CUSHION AROUND THE FORCE MAIN.
IF THE CONFLICT IS BETWEEN A WATER MAIN AND ANY SANITARY SEWER PIPING, 18" CLEARANCE MUST BE MAINTAINED OR NOTE ABOVE APPLIES AND ONLY GRANULAR FILL MAYBE USED.

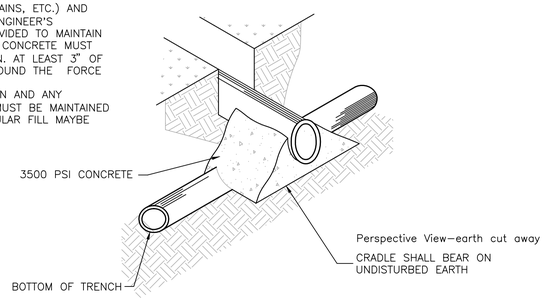

CONCRETE CRADLE DETAIL

NO SCALE

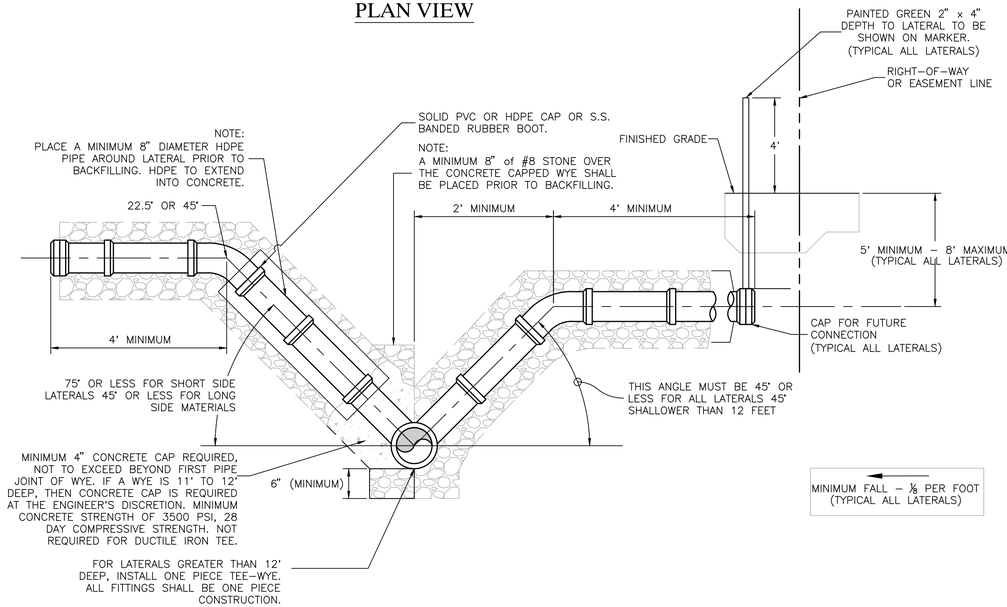

SECTION

MORE THAN 12' DEEP

NOTE:
ALL LATERAL BEDDING SHALL BE UNDISTURBED TRENCH.

LESS THAN 12' DEEP

NOTE:
DEPTH OF SERVICE SHALL BE MEASURED FROM FINISHED GRADE TO THE TOP OF MAIN SEWER LINE.

ALL PIPING FROM WYE 45°/22° FITTING AT 5'-8' BELOW GRADE BE SDR 26 TO 20' DEEP OR SDR 23.5 GREATER THAN 20' DEEP.

SERVICE LATERAL DETAIL

NO SCALE

DRAWN: D. HAYDEN

PROFESSIONAL ENGINEER'S SEAL

SANITARY SEWER PLANS
CITY OF JEFFERSONVILLE
SANITARY LATERAL CONNECTION
& MISCELLANEOUS DETAILS
JEFFERSONVILLE, IN

Revisions

Vertical Scale: NOTED
Horizontal Scale: NOTED
Date: 2/5/2015

Sheet
4
4 of 7

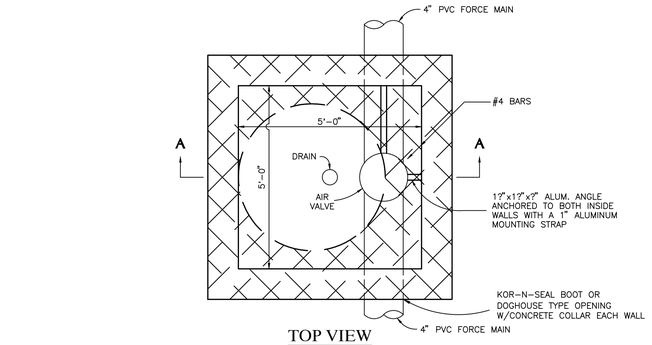

TOP VIEW

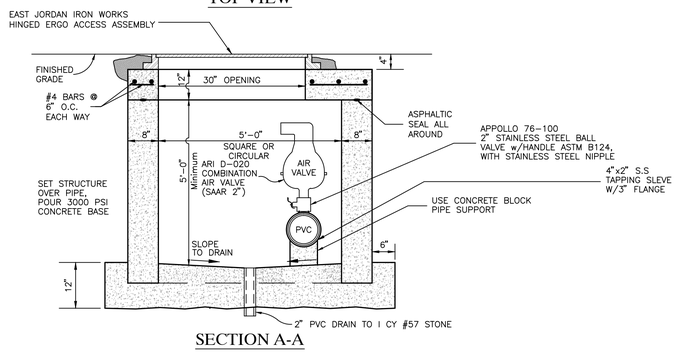

SECTION A-A

CITY OF JEFFERSONVILLE, INDIANA
COMBINATION AIR RELEASE VALVE DETAIL

NO SCALE

PIPE SIZE & TYPE OF FITTING	REQ'D AREA BEARING ON TRENCH WALL (SF)	MIN. CONCRETE VOLUME (CY)
4" – 90°	2.0	0.20
4" T OR PLUG	1.5	0.10
4" – 45°	1.0	0.10
4" – 22 1/2°	0.5	0.10
4" – 11 1/40°	0.5	0.10
8" – 90°	3.5	0.30
8" T OR PLUG	2.5	0.25
8" – 45°	2.0	0.20
8" – 22 1/2°	1.5	0.10
8" – 11 1/40°	1.0	0.10
10" – 90°	6.0	0.35
10" T OR PLUG	4.0	0.30
10" – 45°	3.0	0.25
10" – 22 1/2°	2.0	0.20
10" – 11 1/40°	1.0	0.10
12" – 90°	8.0	0.40
12" T OR PLUG	6.0	0.30
12" – 45°	4.5	0.30
12" – 22 1/2°	3.0	0.20
12" – 11 1/40°	2.0	0.10

(OTHER FORCE MAIN SIZES AS NECESSARY)

THRUST BLOCK REQUIREMENTS

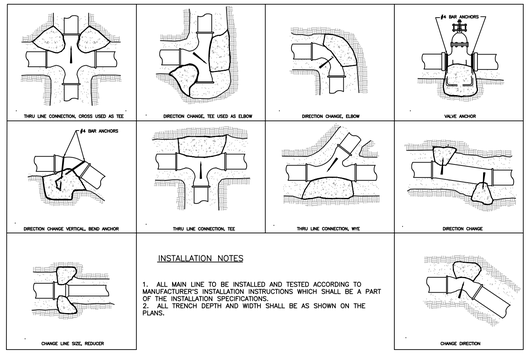

INSTALLATION NOTES

1. ALL MAIN LINE TO BE INSTALLED AND TESTED ACCORDING TO MANUFACTURER'S INSTALLATION INSTRUCTIONS WHICH SHALL BE A PART OF THE INSTALLATION SPECIFICATIONS.
2. ALL TRENCH DEPTH AND WIDTH SHALL BE AS SHOWN ON THE PLANS.

TYPICAL THRUST BLOCK DETAILS FOR WATER SERVICE

GATE PLAN

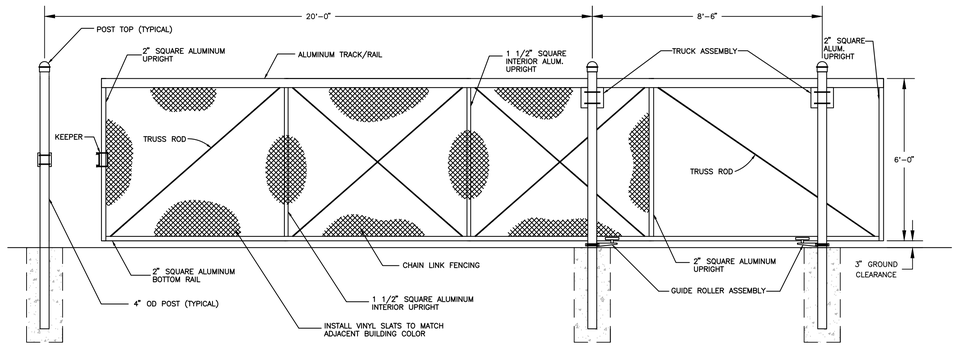

SLIDING CHAIN LINK GATE DETAIL

NO SCALE

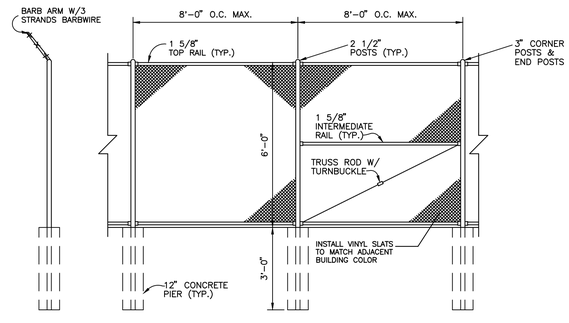

CHAIN LINK FENCE DETAIL

NO SCALE

DRAWN: D. HAYDEN

PROFESSIONAL ENGINEER'S SEAL

SANITARY SEWER PLANS

CITY OF JEFFERSONVILLE

FORCE MAIN DETAILS

JEFFERSONVILLE, IN

Revisions

Vertical Scale: NOTED

Horizontal Scale: NOTED

Date: 2/5/2015

Sheet 5

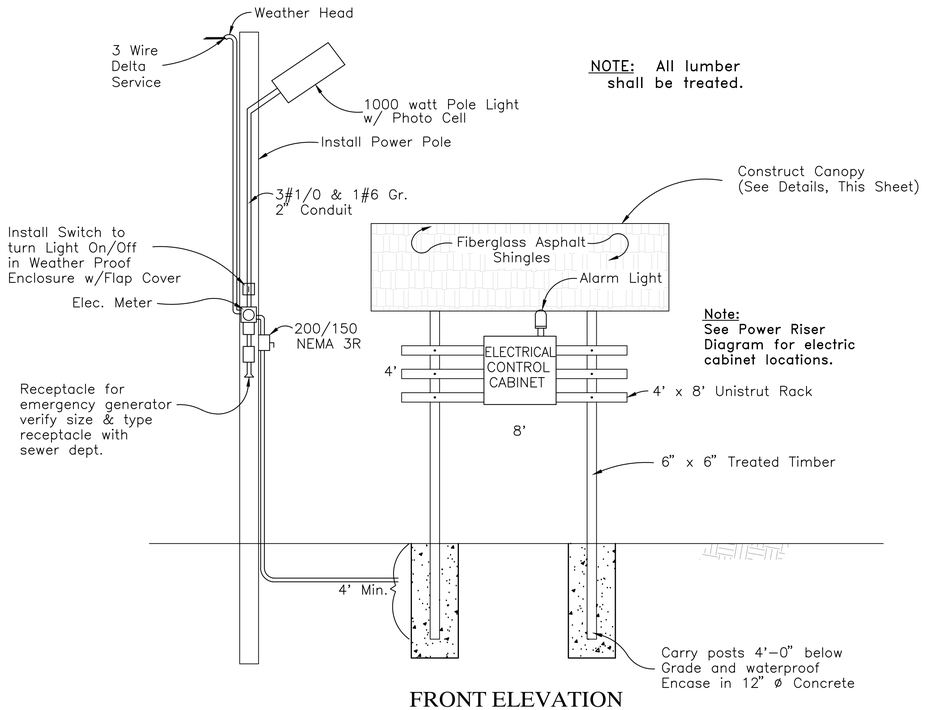

NOTE: All lumber shall be treated.

Note: See Power Riser Diagram for electric cabinet locations.

FRONT ELEVATION

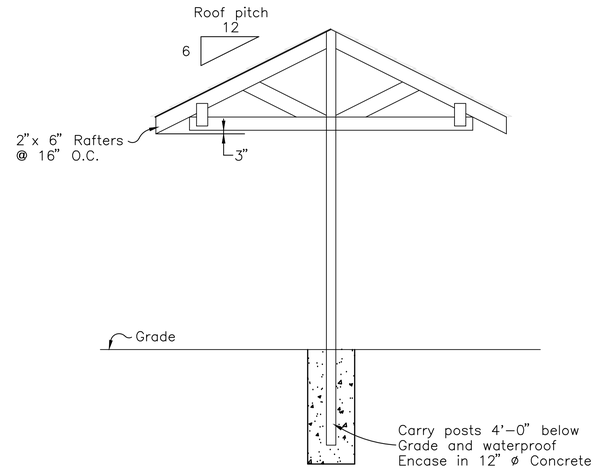

SIDE ELEVATION

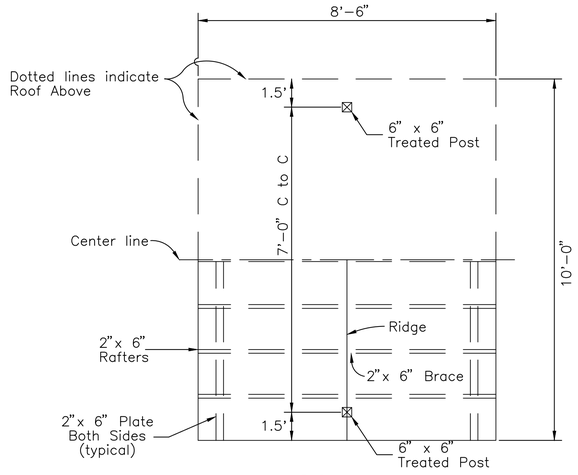

ROOF PLAN

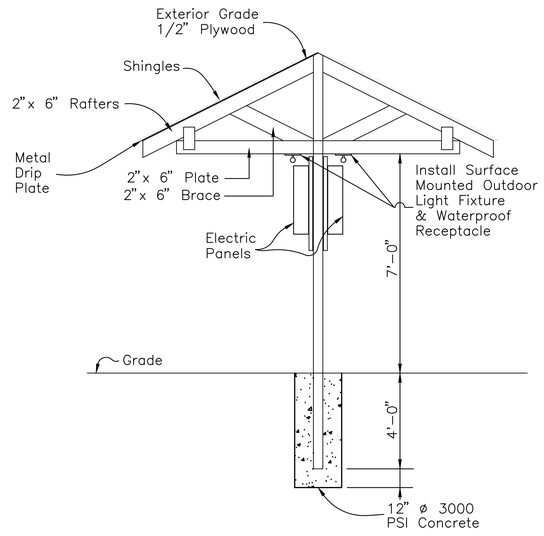

SECTION

DRAWN: D. HAYDEN		PROFESSIONAL ENGINEER'S SEAL	SANITARY SEWER PLANS **CITY OF JEFFERSONVILLE** ELECTRICAL CONTROL CABINET AND ENCLOSURE DETAILS JEFFERSONVILLE, IN		Revisions	Vertical Scale: NOTED Horizontal Scale: NOTED Date: 2/5/2015	Sheet 6 6 of 7

VALVE VAULT

1. ARI 2" Air Release Valve, D-020
2. Check Valve with Outside Weight and Lever and Bottom Buffer Oil Control Cylinder
3. Plug Valve
4. Pressure Gauge, 0-100 PSI, Ashcroft or Equal, with Ball Valve
5. 45° Bend
6. Wye Branch
7. Force Main
8. OSHA Compliant Aluminum Ladder with Intermediate Support to Valve Wall, Bilco Ladder Up Safety Post
9. Romac DJ400 Dismantling Joint

FLOW METER VAULT

10. Romac DJ400 Dismantling Joint

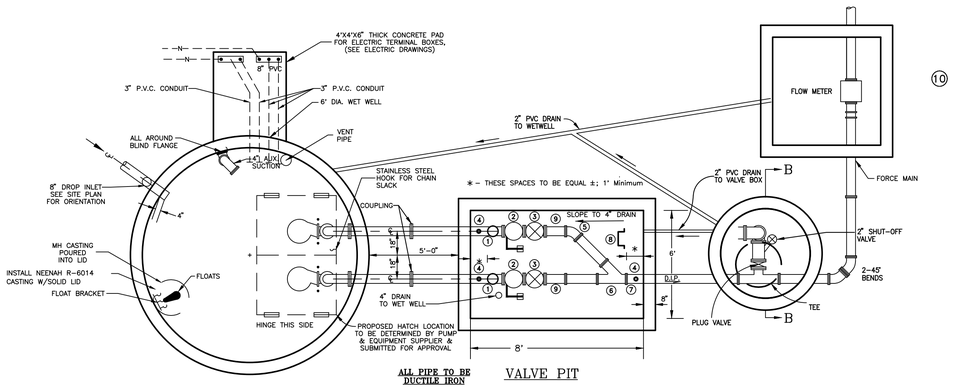

ALL PIPE TO BE DUCTILE IRON

VALVE PIT

WET WELL

(See Site Plan for orientation of Actual Structures)

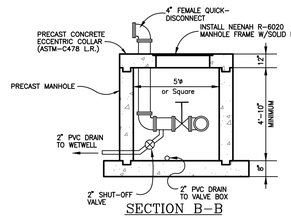

SECTION B-B

WET WELL, VALVE PIT, EMERGENCY PUMP MANHOLE & FLOWMETER VAULT PLAN VIEW

NO SCALE

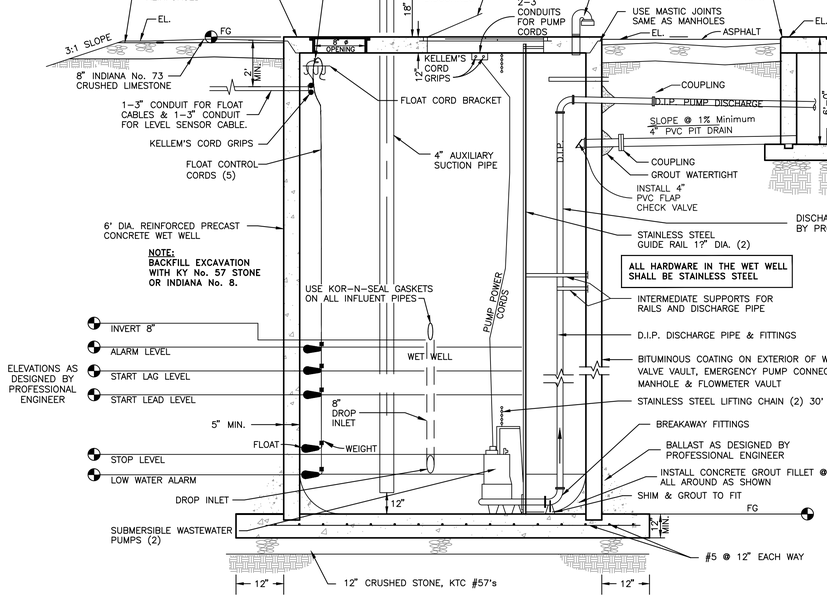

THE ELEVATION OF THE PIPING THROUGH THE EMERGENCY PUMP CONNECTION AND FLOW METER SHALL BE LOWER THAN THE PIPING AT THE AIR RELEASE VALVES IN THE VALVE VAULT.

SECTION VIEW

NO SCALE

SECTION VIEW

NO SCALE

LIFT STATION DESIGN DATA

PUMPS:_____

DESIGN POINT:_____.

NOTES

1. ALL BACKFILL FOR WET WELL & VALVE PIT SHALL BE #57 STONE TO A POINT 2 FEET BELOW FINISHED GRADE.
2. CONFIRM ALL DIMENSIONS WITH PUMP SUPPLIER PRIOR TO START OF CONSTRUCTION.
3. ALL PENETRATIONS OF THE WALLS OF THE WET WELL, VALVE VAULT AND EMERGENCY CONNECTION SHALL BE GROUTED WATERTIGHT WITH NON-SHRINK GROUT.
4. ALL ABOVEGROUND ELBOWS AND PIPING SHALL BE PAINTED SAFETY YELLOW.

DRAWN: D. HAYDEN

PROFESSIONAL ENGINEER'S SEAL

SANITARY SEWER PLANS

CITY OF JEFFERSONVILLE

PUMP STATION DETAILS

JEFFERSONVILLE, IN

Revisions

Vertical Scale: NOTED

Horizontal Scale: NOTED

Date: 2/5/2015

Sheet 7